Low-Power, Two-Port, High-Speed, USB2.0 (480 Mbps) Switch

FSUSB43

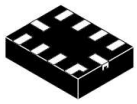

UQFN10 1.6 × 2.1
CASE 523AZ

MARKING DIAGRAM

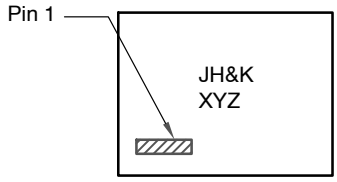

JH = Specific Device Code
&K = 2 Digit Lot Run Code
X = Year
Y = 2 Week Data Code
Z = Plant Code

PIN CONNECTION

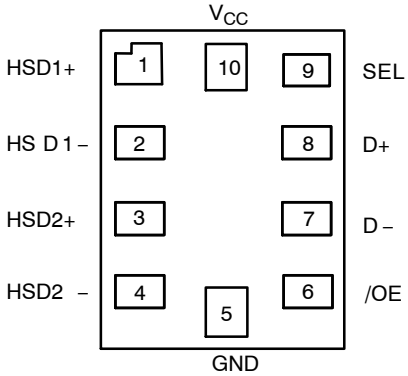

(Top View)

ANALOG SYMBOL

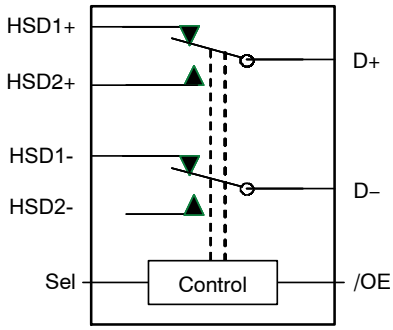

ORDERING INFORMATION

See detailed ordering and shipping information on page 7 of this data sheet.

Description

The FSUSB43 is a bi–directional, low–power, two–port, high–speed, USB2.0 switch. Configured as a double–pole, double–throw (DPDT) switch, it is optimized for switching between two high–speed (480 Mbps) sources or a high–speed and full–speed (12 Mbps) source.

The FSUSB43 is compatible with the requirements of USB2.0 and features an extremely low on capacitance (C_{ON}) of 5.7 pF. The wide bandwidth of this device (720 MHz) exceeds the bandwidth needed to pass the third harmonic, resulting in signals with minimum edge and phase distortion. Superior channel–to–channel crosstalk also minimizes interference.

The FSUSB43 contains special circuitry on the switch I/O pins for applications where the V_{CC} supply is powered–off (V_{CC} = 0), which allows the device to withstand an over–voltage condition. This minimizes current consumption even when the control voltage applied to the SEL pin is lower than the supply voltage (V_{CC}). This feature is especially valuable to mobile applications, such as cell phones, allowing for direct interface with the general–purpose I/Os of the baseband processor. Other applications include switching and connector sharing in portable cell phones, PDAs, digital cameras, printers, and notebook computers.

Features

- Over–Voltage Tolerance (OVT) on all USB Ports up to 5.25 V without External Components
- Low On Capacitance: 5.7 pF Typical
- Low On Resistance: 3.9 Low On Resistance: 3.9 Ω Typical Typical
- Low Power Consumption: 1 μA Maximum
  - 20 μA Maximum ICCT over an Expanded Voltage Range (V_{IN} = 1.8 V, V_{CC} = 4.3 V)
- Wide –3 db Bandwidth: >720 MHz
- Packaged in 10–Lead MicroPak™ (1.6 mm x 2.1 mm)
- 8 kV ESD Rating, >16 kV Power/GND ESD Rating
- Power–Off Protection on All Ports when V_{CC} = 0 V
  - D+/D– Pins Tolerate up to 5.25 V

Typical Applications

- Cell phone, PDA, Digital Camera, and Notebook
- LCD Monitor, TV, and Set–Top Box

© Semiconductor Components Industries, LLC, 2008

Table 1. PIN DESCRIPTION

Pin #	Name	Description
1	HSD1+	Multiplexed Source Inputs
2	HSD1−	Multiplexed Source Inputs
3	HSD2+	Multiplexed Source Inputs
4	HSD2−	Multiplexed Source Inputs
5	GND	Ground
6	$\overline{OE}$	Switch Enable
7	D−	USB Data Bus
8	D+	USB Data Bus
9	SEL	Switch Select
10	V_{CC}	Supply Voltage

Table 2. TRUTH TABLE

SEL	$\overline{OE}$	Function
X	HIGH	Disconnect
LOW	LOW	D+, D− = HSD1+, HSD1−
HIGH	LOW	D+, D− = HSD2+, HSD2−

Table 3. ABSOLUTE MAXIMUM RATINGS

Symbol	Parameter		Min	Max	Unit
V_{CC}	Supply Voltage		−0.5	+5.5	V
V_{CNTRL}	DC Input Voltage (SEL, $\overline{OE}$) (Note 1)		−0.5	V_{CC}	V
W_{SW}	ALL PINS for V_{CC} 0 to 5.5 V		−0.5	5.5	V
I_{IK}	DC Input Diode Current		−50		mA
I_{OUT}	DC Output Current			100	mA
T_{STG}	Storage Temperature		−65	+150	°C
ESD	Human Body Model: JEDEC JESD22−A114	All Pins		8	kV
		I/O to GND		9	
		Power to GND		16	
	Charged Device Model: JEDEC JESD22−C101			2	

Stresses exceeding those listed in the Maximum Ratings table may damage the device. If any of these limits are exceeded, device functionality should not be assumed, damage may occur and reliability may be affected.

1. The input and output negative ratings may be exceeded if the input and output diode current ratings are observed.

Table 4. RECOMMENDED OPERATING CONDITIONS

Symbol	Parameter	Min	Max	Unit
V_{CC}	Supply Voltage	2.4	4.4	V
V_{CNTRL}	Control Input Voltage (SEL, $\overline{OE}$) (Note 2)	0	V_{CC}	V
V_{SW}	Switch I/O Voltage	−0.5	4.5	V
T_A	Operating Temperature	−40	+125	°C

Functional operation above the stresses listed in the Recommended Operating Ranges is not implied. Extended exposure to stresses beyond the Recommended Operating Ranges limits may affect device reliability.

2. The control input must be held HIGH or LOW; it must not float.

Table 5. DC ELECTRICAL CHARACTERISTICS

Symbol	Parameter	Conditions	V_{CC} (V)	T_A (Note 3) Min	Typ	Max	Unit
V_{IK}	Clamp Diode Voltage	I_{IN} = −18 mA	3.0			−1.2	V
V_{IH}	Input Voltage High		2.4 to 3.6	1.3			V
			4.3	1.7			V
V_{IL}	Input Voltage Low		2.4 to 3.6			0.5	V
			4.3			0.7	V
I_{IN}	Control Input Leakage	V_{SW} = 0 V to V_{CC}	4.3	−1.0		1.0	μA
I_{OZ}	Off State Leakage	0 ≤ Dn, HSD1n, HSD2n ≤ 3.6 V	4.3	−2.0		2.0	μA
I_{OFF}	Power−Off Leakage Current (All I/O Ports)	V_{SW} = 0 V to 4.3 V, V_{CC} = 0 V (Figure 2)	0	−2		2	μA
R_{ON}	HS Switch On Resistance (Note 4)	V_{SW} = 0.4 V, I_{ON} = −8 mA (Figure 1)	2.4		4.5	7.5	Ω
			3.0		3.9	6.5	
R_{ON}	HS Switch On Resistance (Note 4)	V_{SW} = 0.4 V, I_{ON} = −8 mA −40°C to 125°C (Figure 1)	2.4		4.5	9	Ω
			3.0		3.9	8	
ΔR_{ON}	HS Delta R_{ON} (Note 5)	V_{SW} = 0.4 V, I_{ON} = −8 mA	3.0		0.65		Ω
I_Q	Quiescent Supply Current	V_{CNTRL} = 0 or V_{CC}, I_{OUT} = 0	4.3			1.0	μA
I_{CCT}	Increase in I_Q Current per Control Voltage and V_{CC}	V_{CNTRL} = 2.6 V, V_{CC} = 4.3 V	4.3			10.0	μA
		V_{CNTRL} = 1.8 V, V_{CC} = 4.3 V	4.3			20.0	μA

Product parametric performance is indicated in the Electrical Characteristics for the listed test conditions, unless otherwise noted. Product performance may not be indicated by the Electrical Characteristics if operated under different conditions.

3. All typical values are 25°C, and Min/Max values are −40°C to +85°C unless otherwise specified.
4. Measured by the voltage drop between HSDn and Dn pins at the indicated current through the switch.On resistance is determined by the lower of the voltage on the two (HSDn or Dn ports).
5. Guaranteed by characterization.

Table 6. AC ELECTRICAL CHARACTERISTICS

Symbol	Parameter	Conditions	V_{CC} (V)	T_A (Note 3) Min	Typ	Max	Unit
t_{ON}	Turn−On Time, SEL, $\overline{OE}$ to Output	R_L = 50 Ω, C_L = 5 pF, V_{SW} = 0.8 V (Figure 3), (Figure 4)	2.4		24	40	ns
			3.0 to 3.6		13	30	
t_{OFF}	Turn−Off Time, SEL, $\overline{OE}$ to Output	R_L = 50 Ω, C_L = 5 pF, V_{SW} = 0.8 V (Figure 3), (Figure 4)	2.4		15	35	ns
			3.0 to 3.6		12	25	
t_{PD}	Propagation Delay (Note 6)	R_L = 50 Ω, C_L = 5 pF −40°C to 125°C (Figure 3), (Figure 5)	3.3		0.25		ns
t_{BBM}	Break−Before−Make Time (Note 6)	R_L = 50 Ω, C_L = 5 pF, V_{SW1} = V_{SW2} = 0.8 V (Figure 7)	2.4	2.0		10	ns
			3.0 to 3.6	2.0		6.5	
OIRR	Off Isolation (Note 6)	R_L = 50 Ω, f = 240 Mhz (Figure 9)	3.0 to 3.6		−30		dB
Xtalk	Non−Adjacent Channel Crosstalk (Note 6)	R_L = 50 Ω, f = 240 Mhz (Figure 10)	3.0 to 3.6		−45		dB
BW	−3dB Bandwidth (Note 6)	R_L = 50 Ω, C_L = 0 pF (Figure 8)	3.0 to 3.6		720		MHz
		R_L = 50 Ω, C_L = 5 pF (Figure 8)			550		MHz

Product parametric performance is indicated in the Electrical Characteristics for the listed test conditions, unless otherwise noted. Product performance may not be indicated by the Electrical Characteristics if operated under different conditions.

6. Guaranteed by characterization.

Table 7. USB HIGH−SPEED−RELATED AC ELECTRICAL CHARACTERISTICS

Symbol	Parameter	Conditions	V_{CC} (V)	T_A (Note 3)			Unit
				Min	Typ	Max	
$t_{SK(P)}$	Skew of Opposite Transitions of the Same Output (Note 7)	R_L = 50 Ω, C_L = 5 pF (Figure 6)	3.0 to 3.6		20		ps
t_J	Total Jitter (Note 7)	R_L = 50 Ω, C_L = 5 pF, $t_r = t_f$ = 500 ps (10−90%) at 480 Mbps (PRBS = $2^{15} - 1$)	3.0 to 3.6		200		ps

Product parametric performance is indicated in the Electrical Characteristics for the listed test conditions, unless otherwise noted. Product performance may not be indicated by the Electrical Characteristics if operated under different conditions.

7. Guaranteed by characterization.

Table 8. CAPACITANCE

Symbol	Parameter	Conditions	T_A (Note 3)			Unit
			Min	Typ	Max	
C_{IN}	Control Pin Input Capacitance (Note 8)	V_{CC} = 0 V		1.5		pF
C_{ON}	D+/D− On Capacitance (Note 8)	V_{CC} = 3.3 V, $\overline{OE}$ = 0 V, −40°C to 125°C f = 240 Mhz (Figure 12)		5.5		
C_{OFF}	D1n, D2n Off Capacitance (Note 8)	V_{CC} and $\overline{OE}$ = 3.3 V (Figure 11)		2.0		

8. Guaranteed by characterization.

TEST DIAGRAMS

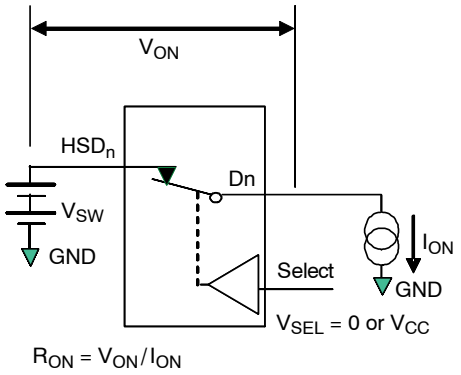

Figure 1. On Resistance

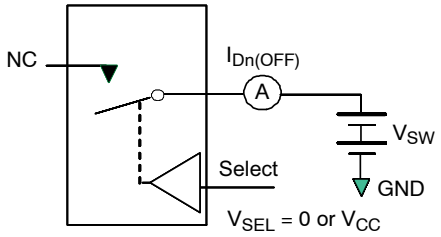

**Each switch port is tested separately

Figure 2. Off Leakage

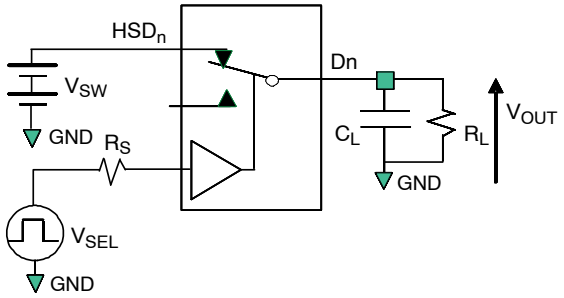

R_L, R_S, and C_L are functions of the application environment (see AC Tables for specific values)
C_L includes test fixture and stray capacitance.

Figure 3. AC Test Circuit Load

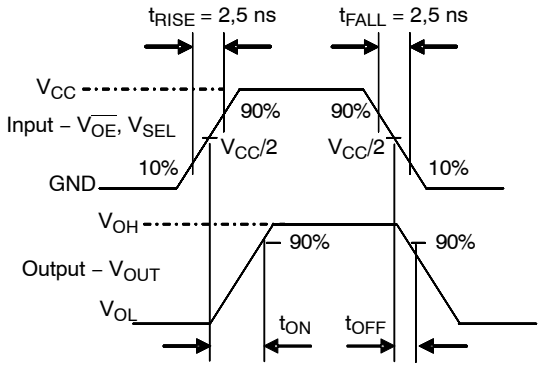

Figure 4. Turn−On / Turn−Off Waveforms

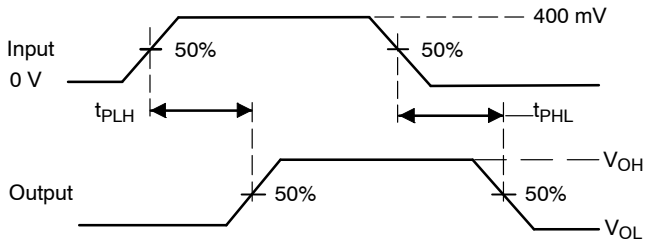

Figure 5. Propagation Delay ($t_R t_F$ – 500 ps)

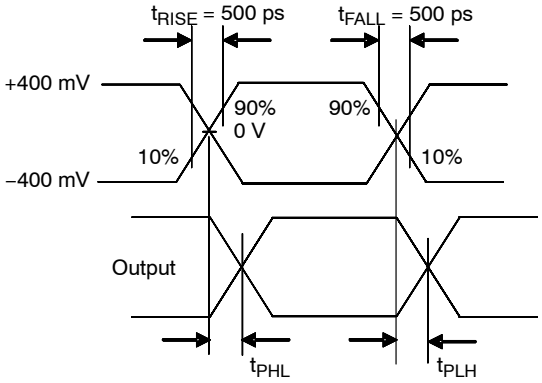

Figure 6. Intra-Pair Skew Test $t_{SK(P)}$

TEST DIAGRAMS (Continued)

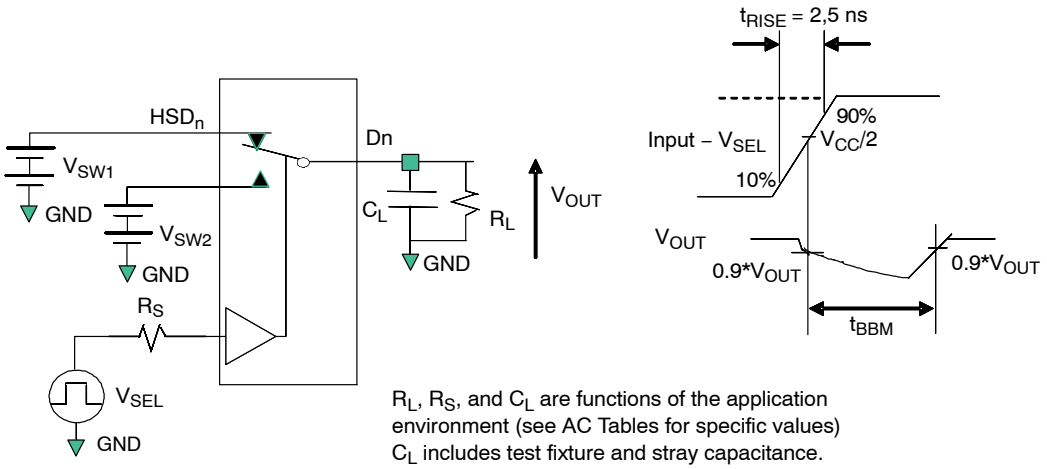

Figure 7. Break−Before−Make Interval Timing

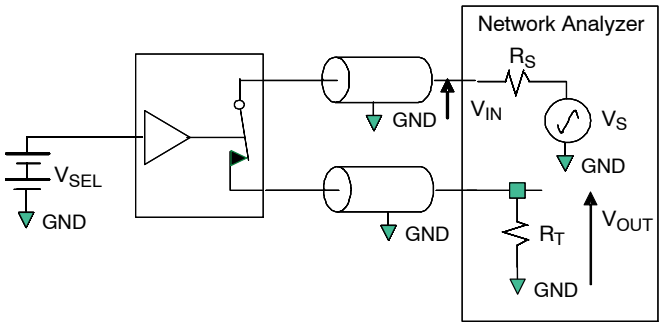

R_S, and R_T are functions of the application environment (see AC Tables for specific values).

Figure 8. Bandwidth

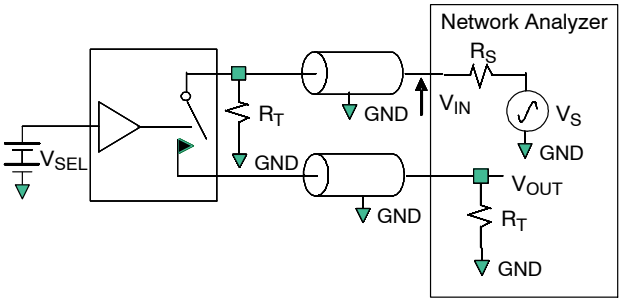

Off isolation = 20 Log (V_{OUT}/V_{IN})

R_S, and R_T are functions of the application environment (see AC Tables for specific values).

Figure 9. Channel Off Isolation

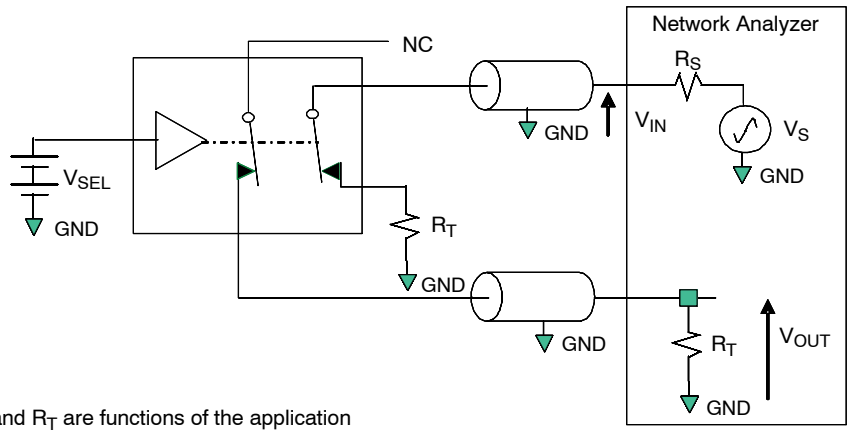

R_S, and R_T are functions of the application environment (see AC Tables for specific values).

Crosstalk = 20 Log (V_{OUT}/V_{IN})

Figure 10. Non-Adjacent Channel-to-Channel Crosstalk

TEST DIAGRAMS (Continued)

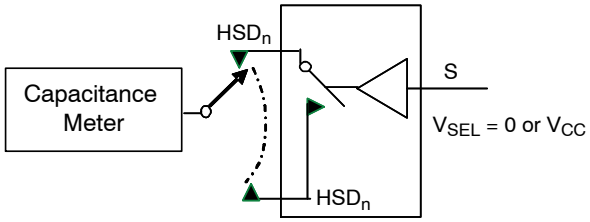

Figure 11. Channel Off Capacitance

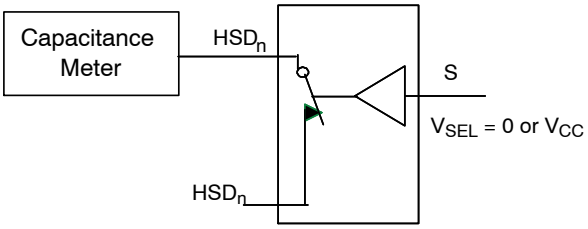

Figure 12. Channel On Capacitance

Table 9. ORDERING INFORMATION

Part Number	Device Code	Operating Temperature Range	Package	Shipping†
FSUSB43L10X	JH	−40 to 125°C	10−Lead MicroPak (1.6 x 2.1 mm) JEDEC MO−255B	5000 / Tape and Reel

†For information on tape and reel specifications, including part orientation and tape sizes, please refer to our Tape and Reel Packaging Specification Brochure, BRD8011/D.

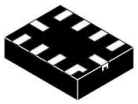

UQFN10 (MICROPAK™), 1.6X2.1, 0.5P
CASE 523AZ
ISSUE A

DATE 11 DEC 2019

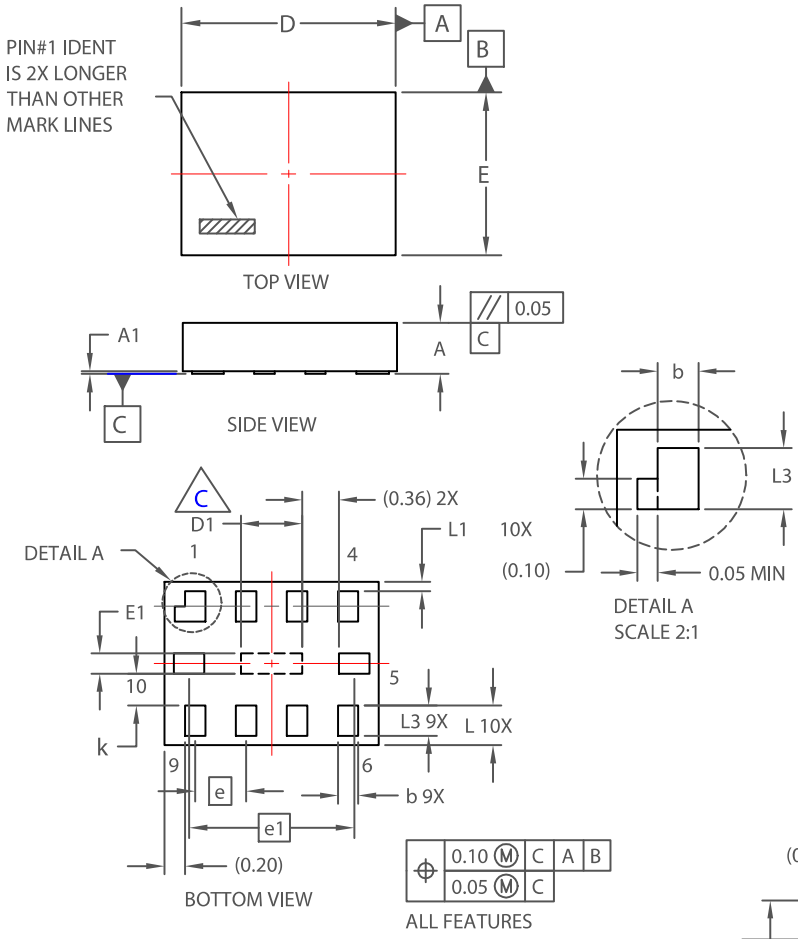

NOTES:
A. PACKAGE CONFORMS TO JEDEC REGISTRATION MO-255, VARIATION UABD.
B. DIMENSIONS ARE IN MILLIMETERS.
C. PRESENCE OF CENTER PAD IS PACKAGE SUPPLIER DEPENDENT. IF PRESENT IT IS NOT INTENDED TO BE SOLDERED AND HAS A BLACK OXIDE FINISH.
D. DIMENSIONS WITHIN ( ) ARE UNCONTROLLED.

DIM	MIN.	NOM.	MAX.
A	0.50	0.55	0.65
A1	0.00	0.025	0.05
b	0.15	0.20	0.25
D	2.00	2.10	2.20
D1	0.55	0.60	0.65
E	1.50	1.60	1.70
E1	0.15	0.20	0.25
e	0.50 BSC		
e1	1.62 BSC		
k	0.20	--	--
L	0.25	0.30	0.42
L1	0.00	0.09	0.15
L3	0.25	0.30	0.35

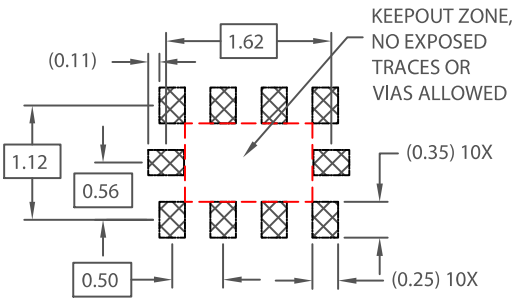

RECOMMENDED
MOUNTING FOOTPRINT *

*FOR ADDITIONAL INFORMATION ON OUR Pb-FREE STRATEGY AND SOLDERING DETAILS, PLEASE DOWNLOAD THE ON SEMICONDUCTOR SOLDERING AND MOUNTING TECHNIQUES REFERENCE MANUAL, SOLDERRM/D.

DOCUMENT NUMBER:	**98AON13592G**	Electronic versions are uncontrolled except when accessed directly from the Document Repository. Printed versions are uncontrolled except when stamped "CONTROLLED COPY" in red.
DESCRIPTION:	**UQFN10 (MICROPAK™), 1.6X2.1, 0.5P**	**PAGE 1 OF 1**

onsemi and onsemi are trademarks of Semiconductor Components Industries, LLC dba **onsemi** or its subsidiaries in the United States and/or other countries. **onsemi** reserves the right to make changes without further notice to any products herein. **onsemi** makes no warranty, representation or guarantee regarding the suitability of its products for any particular purpose, nor does **onsemi** assume any liability arising out of the application or use of any product or circuit, and specifically disclaims any and all liability, including without limitation special, consequential or incidental damages. **onsemi** does not convey any license under its patent rights nor the rights of others.

onsemi, onsemi, and other names, marks, and brands are registered and/or common law trademarks of Semiconductor Components Industries, LLC dba "**onsemi**" or its affiliates and/or subsidiaries in the United States and/or other countries. **onsemi** owns the rights to a number of patents, trademarks, copyrights, trade secrets, and other intellectual property. A listing of **onsemi**'s product/patent coverage may be accessed at www.onsemi.com/site/pdf/Patent−Marking.pdf. **onsemi** reserves the right to make changes at any time to any products or information herein, without notice. The information herein is provided "as−is" and **onsemi** makes no warranty, representation or guarantee regarding the accuracy of the information, product features, availability, functionality, or suitability of its products for any particular purpose, nor does **onsemi** assume any liability arising out of the application or use of any product or circuit, and specifically disclaims any and all liability, including without limitation special, consequential or incidental damages. Buyer is responsible for its products and applications using **onsemi** products, including compliance with all laws, regulations and safety requirements or standards, regardless of any support or applications information provided by **onsemi**. "Typical" parameters which may be provided in **onsemi** data sheets and/or specifications can and do vary in different applications and actual performance may vary over time. All operating parameters, including "Typicals" must be validated for each customer application by customer's technical experts. **onsemi** does not convey any license under any of its intellectual property rights nor the rights of others. **onsemi** products are not designed, intended, or authorized for use as a critical component in life support systems or any FDA Class 3 medical devices or medical devices with a same or similar classification in a foreign jurisdiction or any devices intended for implantation in the human body. Should Buyer purchase or use **onsemi** products for any such unintended or unauthorized application, Buyer shall indemnify and hold **onsemi** and its officers, employees, subsidiaries, affiliates, and distributors harmless against all claims, costs, damages, and expenses, and reasonable attorney fees arising out of, directly or indirectly, any claim of personal injury or death associated with such unintended or unauthorized use, even if such claim alleges that **onsemi** was negligent regarding the design or manufacture of the part. **onsemi** is an Equal Opportunity/Affirmative Action Employer. This literature is subject to all applicable copyright laws and is not for resale in any manner.

ADDITIONAL INFORMATION

TECHNICAL PUBLICATIONS:
Technical Library: www.onsemi.com/design/resources/technical−documentation
onsemi Website: www.onsemi.com

ONLINE SUPPORT: www.onsemi.com/support
For additional information, please contact your local Sales Representative at
www.onsemi.com/support/sales